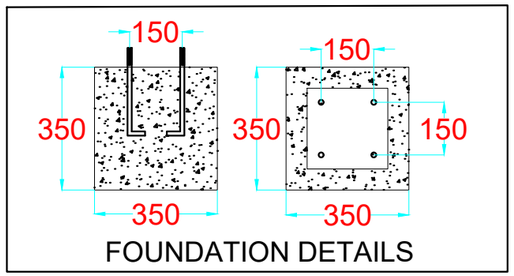


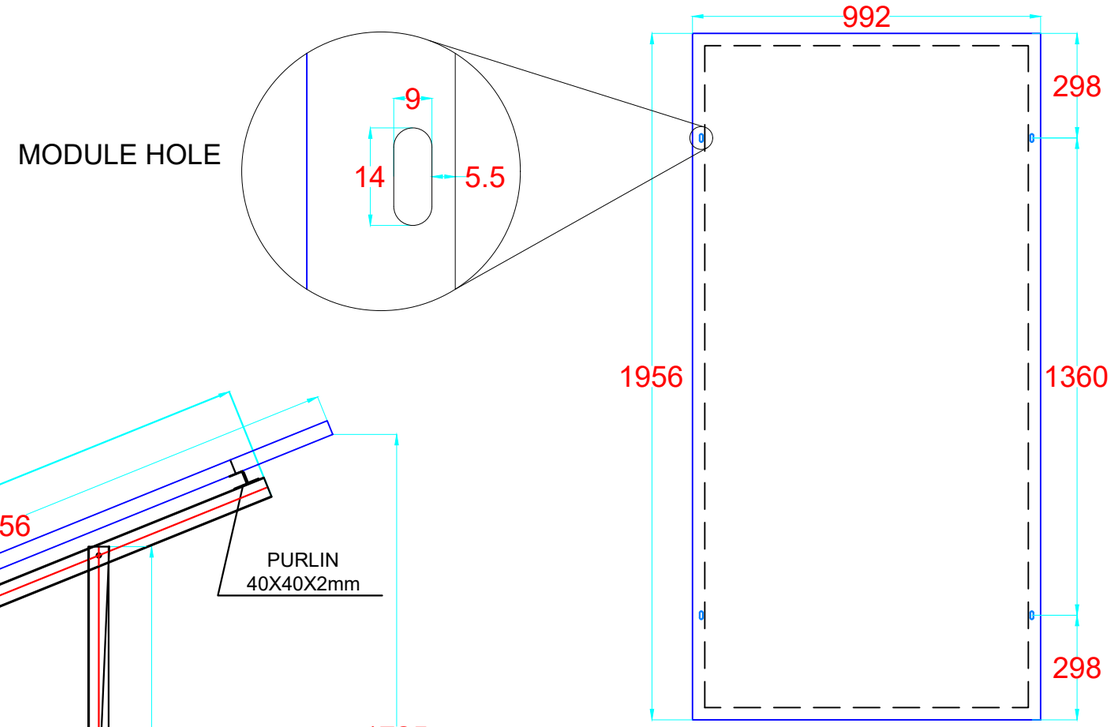


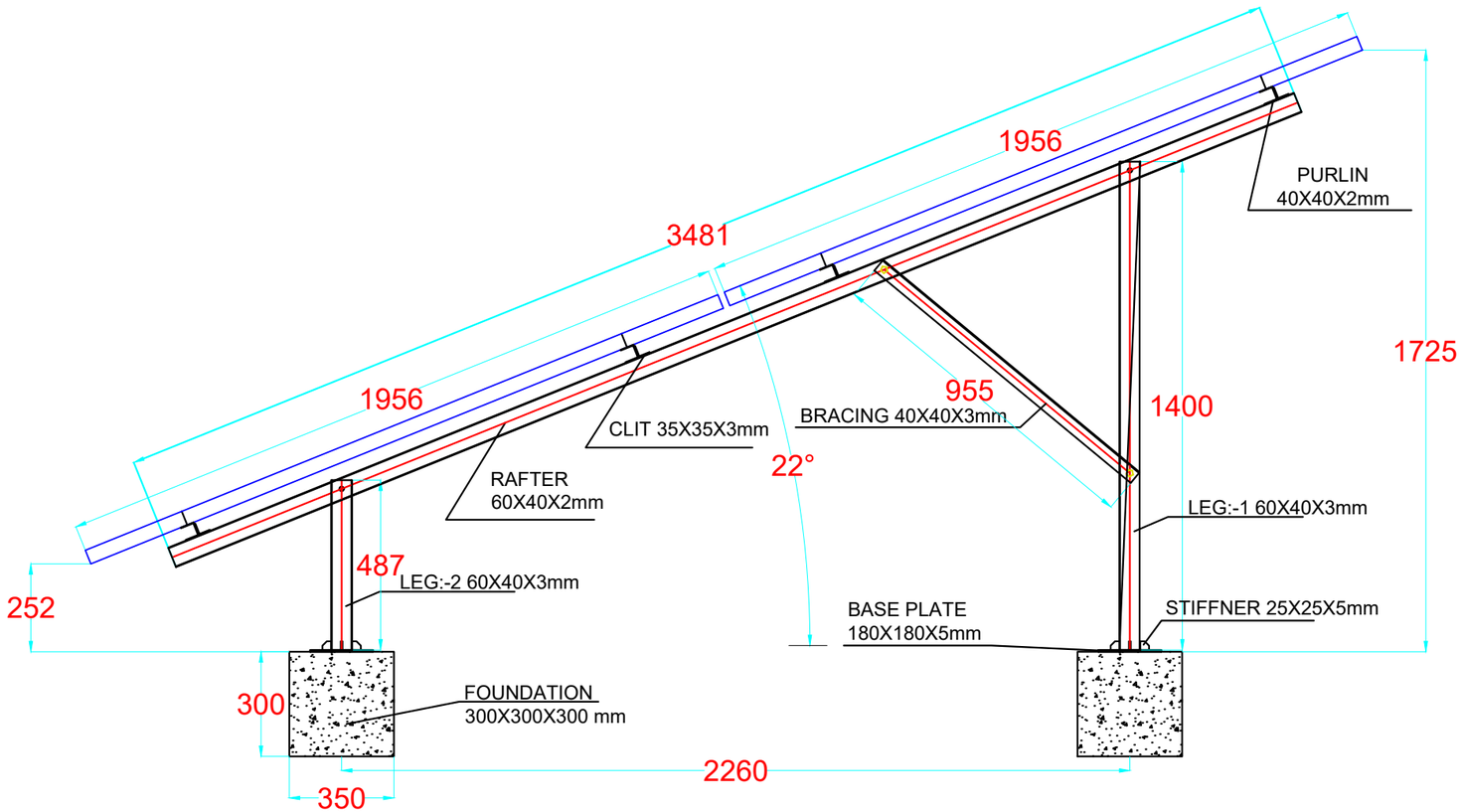


## ROOFTOP 2X5 STRUCTURE

| MEMBERS | SECTION DETAILS | SECTION LENGTH |
|---|---|---|
| LEG-1 | C-SECTION - 60X40 - 3mm Thickness | 1400 MM |
| LEG-2 | C-SECTION - 60X40 - 3mm Thickness | 487 MM |
| RAFTER | C-SECTION - 60X40 - 2mm Thickness | 3481 MM |
| PURLIN-1 | C-SECTION - 40X40 - 2 Thickness | 3026 MM |
| PURLIN-2 | C-SECTION - 40X40 - 2 Thickness | 3026 MM |
| BRACING | L-ANGLE - 40X40 - 3mmThickness | 955 MM |
| BASE PLATE | PLATE 180X180 - 5MM Thickness | 350 MM |
| STIFFANAR | PLATE 25X25 - 5MM Thickness | 50 MM |
| CLIT | L-ANGLE 35X35 - 3mmThickness | 100 MM |

# STRUCTURE DETAIL

SCALE: NOT TO SCALE

NOTE: All dimensions are in mm.

**NOTE:-**

EPC

OWNER

SD 1.0

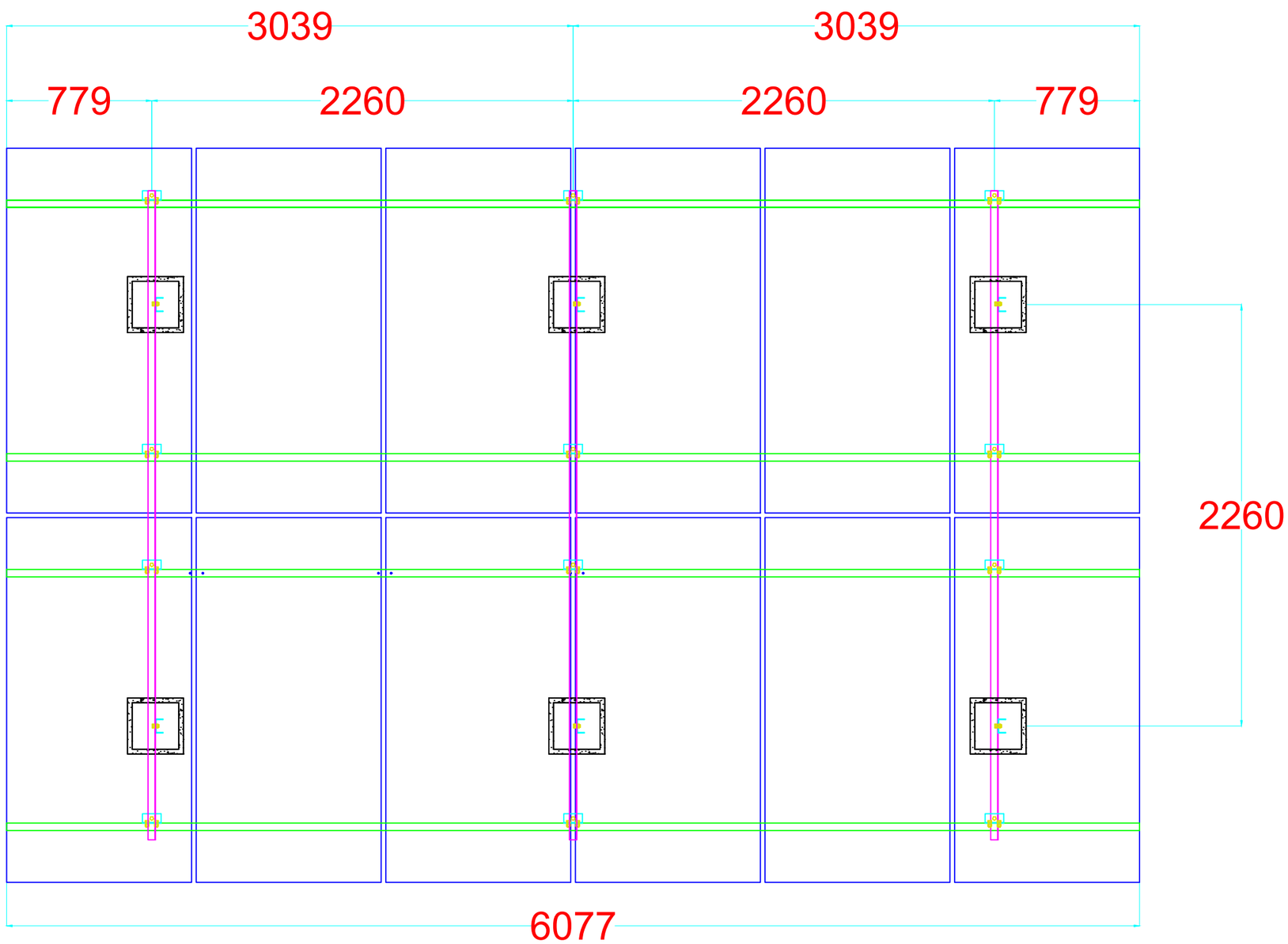


NOTE:-

EPC

OWNER

# STRUCTURE DETAIL

SCALE: NOT TO SCALE

SD 1.0

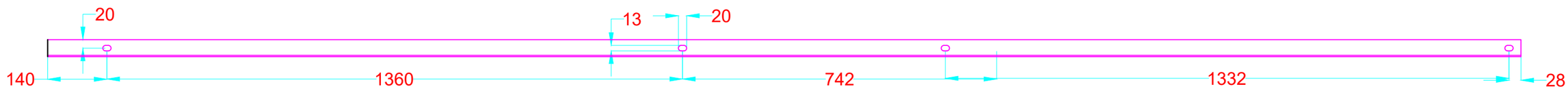


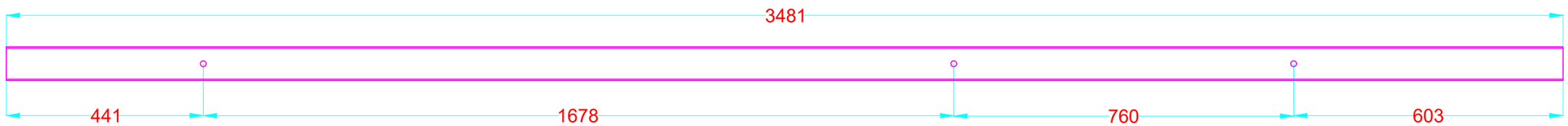


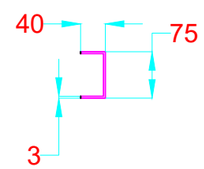


RAFTER

# STRUCTURE DETAIL

SCALE: NOT TO SCALE

**NOTE:-**

EPC

OWNER

SD 1.0

# PURLIN 1

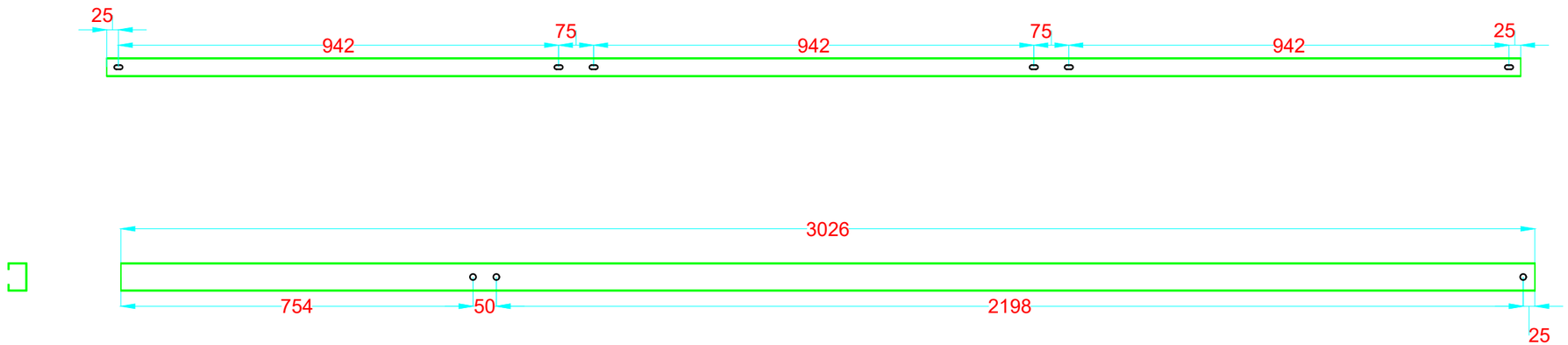


# PURLIN 2

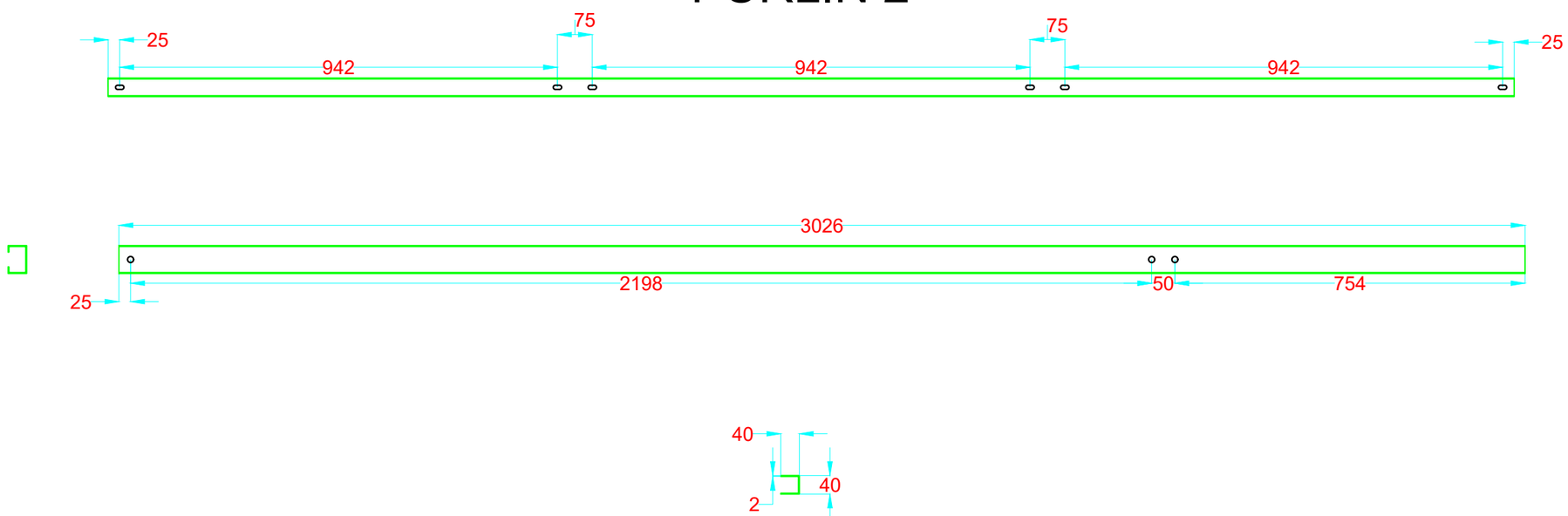


**NOTE:-**

EPC

OWNER

# STRUCTURE DETAIL

SCALE: NOT TO SCALE

SD 1.0

# LEG : 1

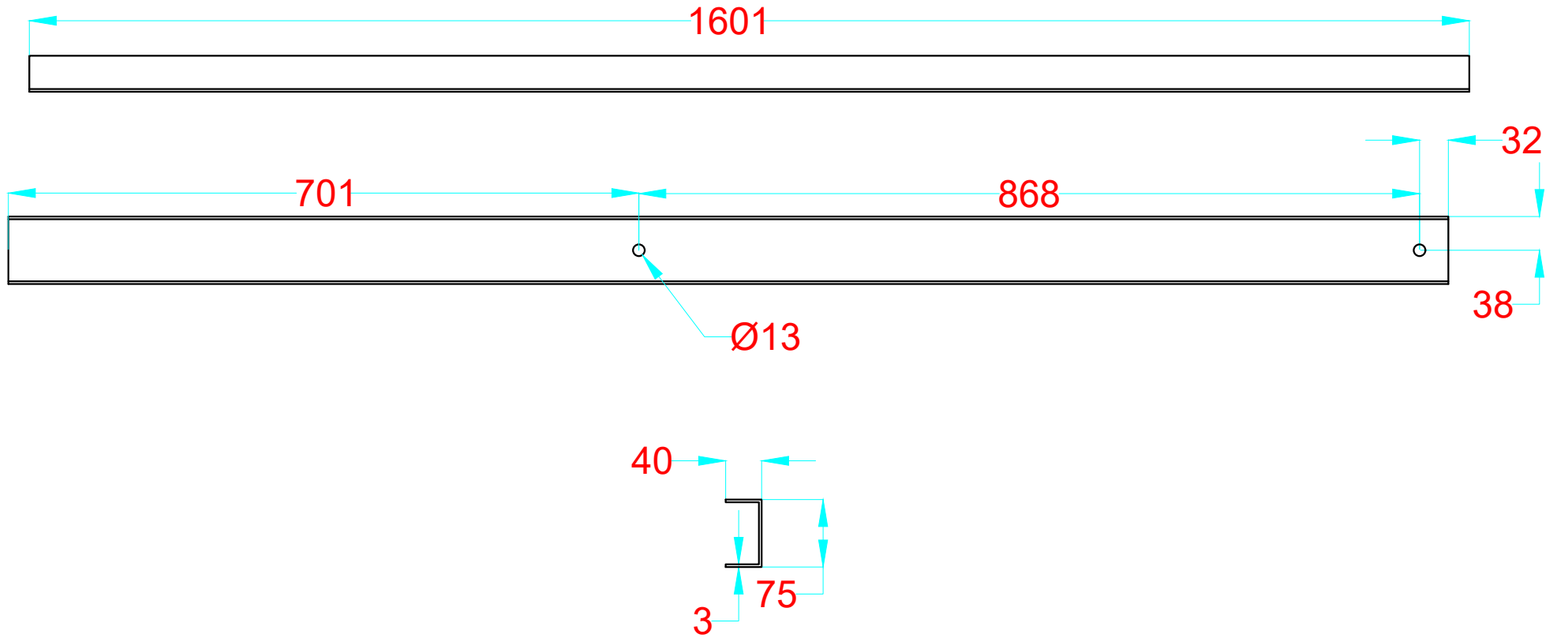


# LEG : 2

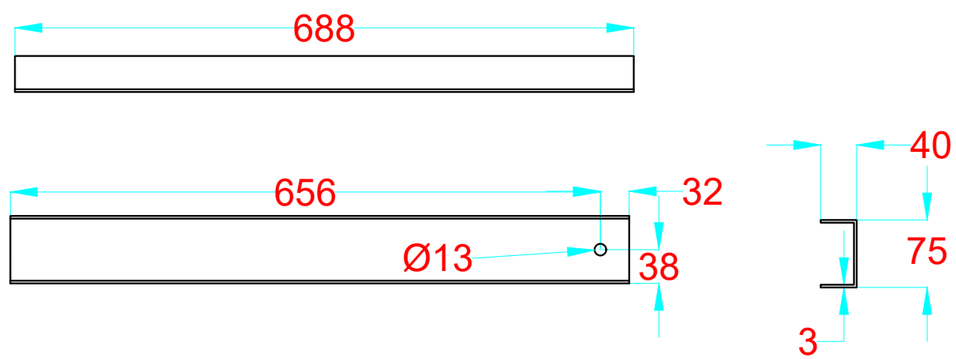


# STRUCTURE DETAIL

SCALE: NOT TO SCALE

**NOTE:-**

EPC

OWNER

SD 1.0

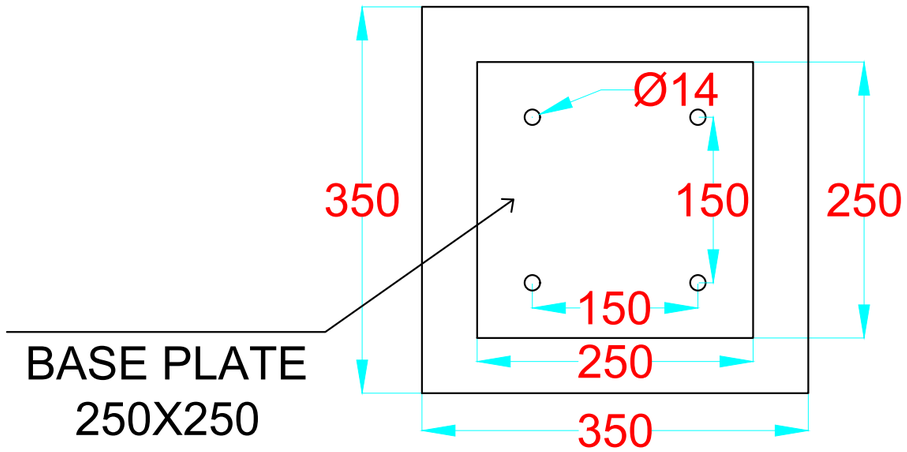


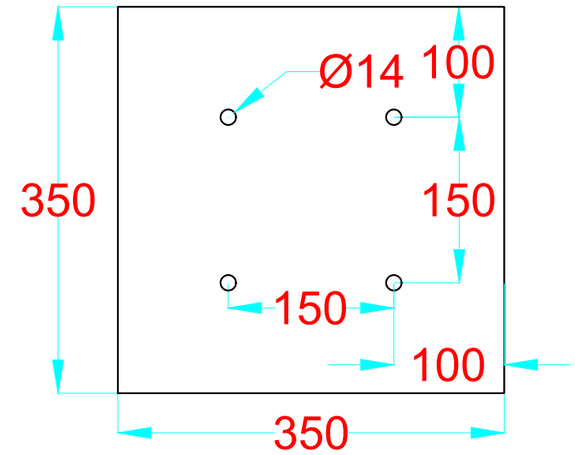


TEMPLATE

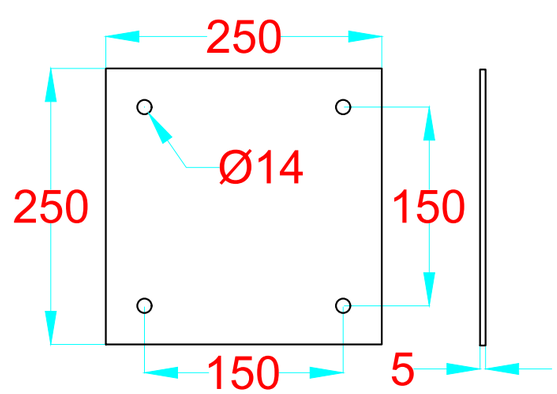


BASE PLATE

# STRUCTURE DETAIL

SCALE: NOT TO SCALE

**NOTE:-**

EPC

OWNER

SD 1.0

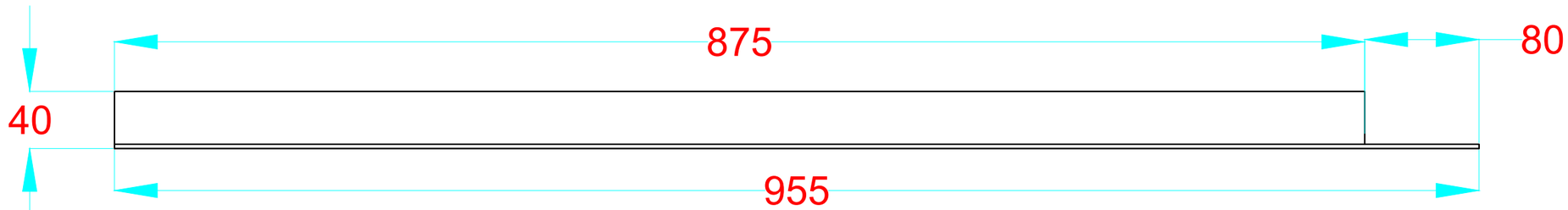


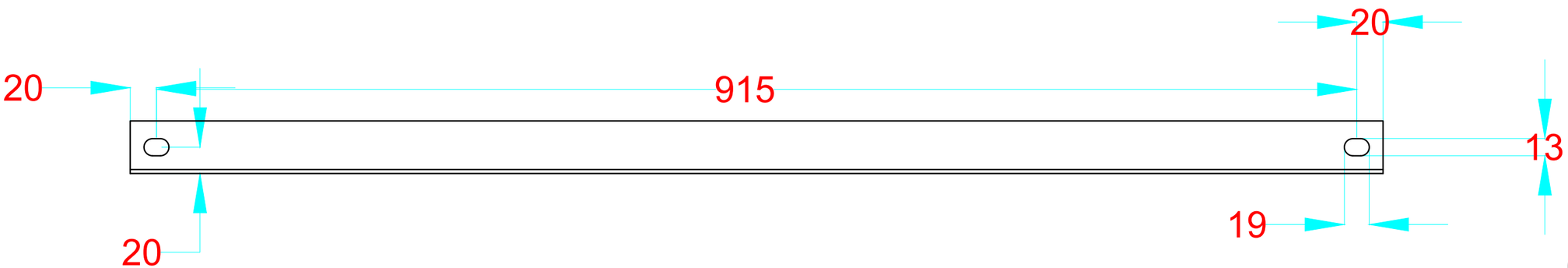


# BRACING

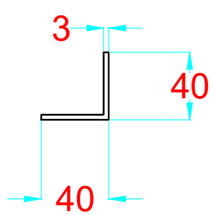


# STRUCTURE DETAIL

SCALE: NOT TO SCALE

**NOTE:-**

EPC

OWNER

DATE: 4.13.2025

SD 1.0

CLIT

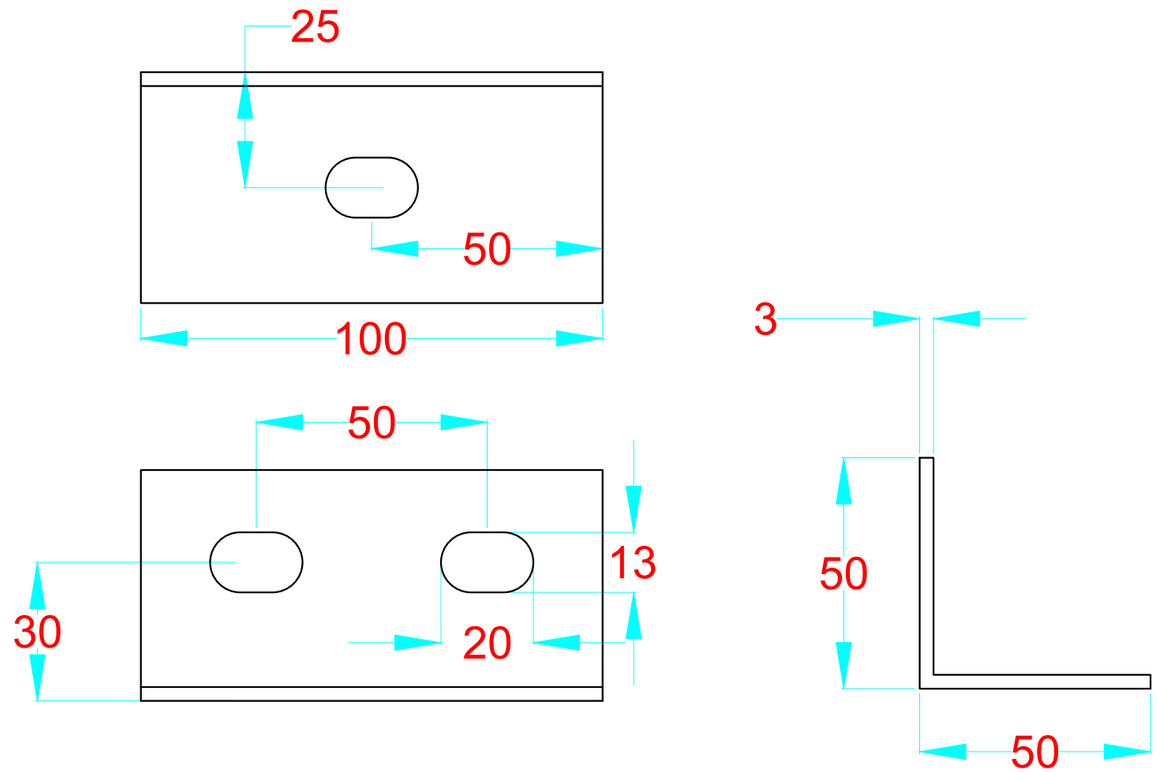


STIFFNER

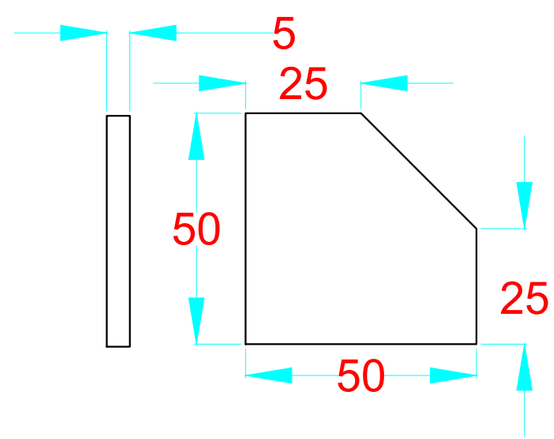


# STRUCTURE DETAIL

SCALE: NOT TO SCALE

**NOTE:-**

EPC

OWNER

**DATE:** 4.13.2025

SD 1.0